DRAWING FOR CUSTOMER

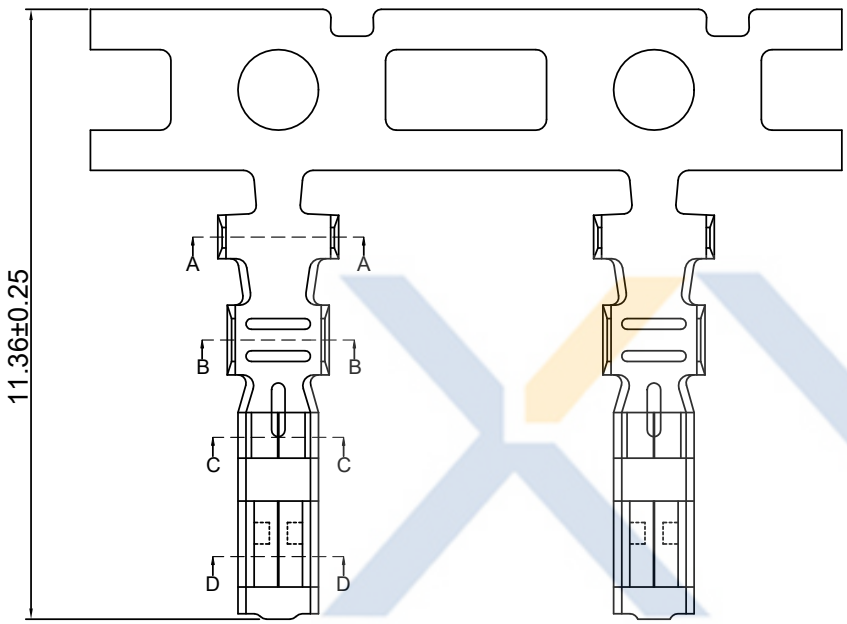

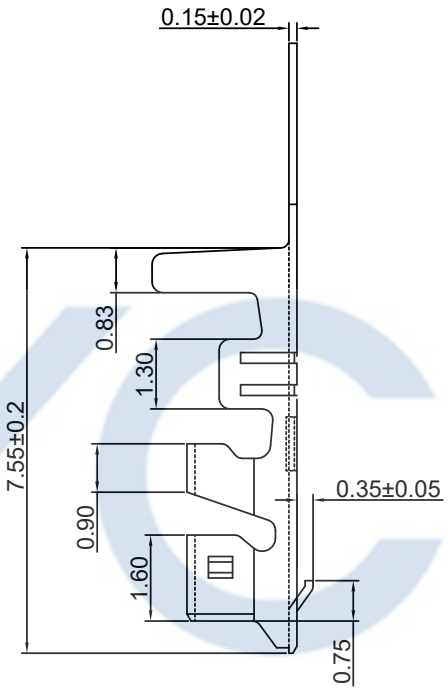

■SPEC.:
- ●Rated Voltage:250V AC,DC
- ●Rated Current:3A AC,DC
- ●Withstand Voltage:800V AC/minute
- ●Contact Resistance:10mΩ max
- ●Insulation Resistance:1000MΩ min
- ●Temperature Range:-25℃~+85℃

■Terminal:
- ●Material:Phosphor Bronze
- ●Finish:Tin/Gold-plated,over Nickel
- ●Applicable wire:AWG#22~28
  Insulator OD:Ø1.50mm MAX
- ●QTY.:8KPCS/Plate

XY20007-X X T 2 A

1:All plated
2:Half plated

Plating
0：Tin-plat
1：Gold Flash
2：Gold Plat3u"
3：Gold Plat5u"

Version

Mold No.

Terminal

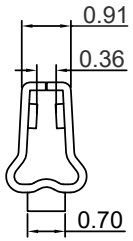

Section:D-D

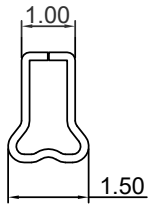

Section:C-C

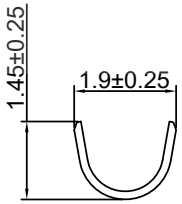

Section:B-B

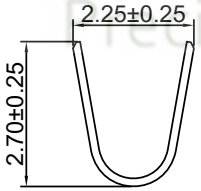

Section:A-A

Precision Connectors

					TOLERANCE 公 差	DRAWING 設計者	Devin	XY20007-XXT2A		XYCO 东莞市轩业电子科技有限公司 TEL: 0769-8297 9981/2/3 http://www.XYCO.com.cn		
2022-07-18	A		XY20007-XXT2A	Devin	.X=±0.30 .XX=±0.20 .XXX=±0.10	CHECKED 審查	Thomas	PART NO. 料號		UNIT 單位	mm	PRODUCT NAME 產品名稱
DATE 日期	VER 版本	CHANGE HISTORY 變更歷史	CHANGED NAME 修改後料號	DRAWING 變更者		APPROVED 核准	William	DWG NO. 圖號	PE220702A			PND PH2.00mm Wire To Board Terminal